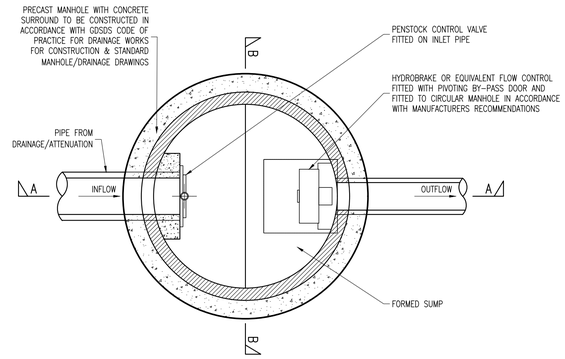

PLAN

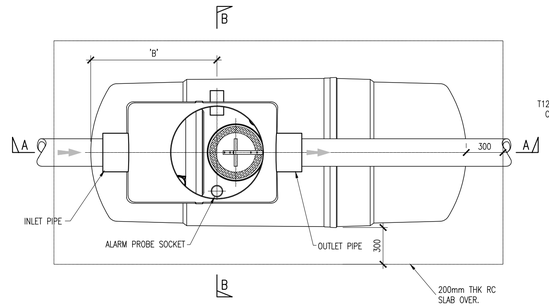

PLAN

DIMENSIONS

UNIT REF No.	NOMINAL FLOW	LENGTH	DIAMETER	STD. PIPE ø	APPROX. EMPTY WEIGHT (KG)	FALL ACROSS UNIT
NSBE010	10 L/S	2069	1220	315	240	100
NSBE040	40 L/S	3230	1920	500	240	100

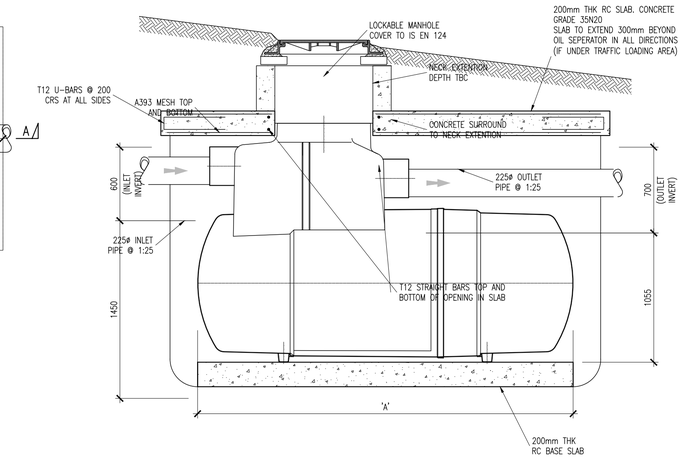

SECTION A–A

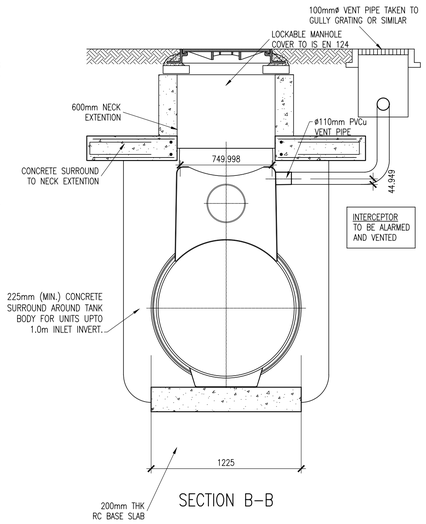

SECTION B–B

BYPASS INTERCEPTOR DETAIL

SCALE 1:25

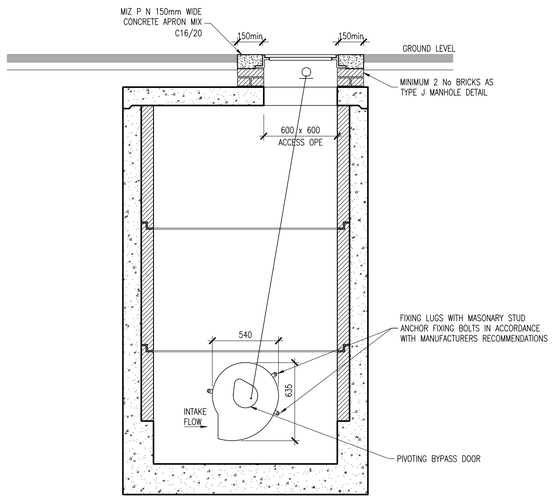

SECTION A–A

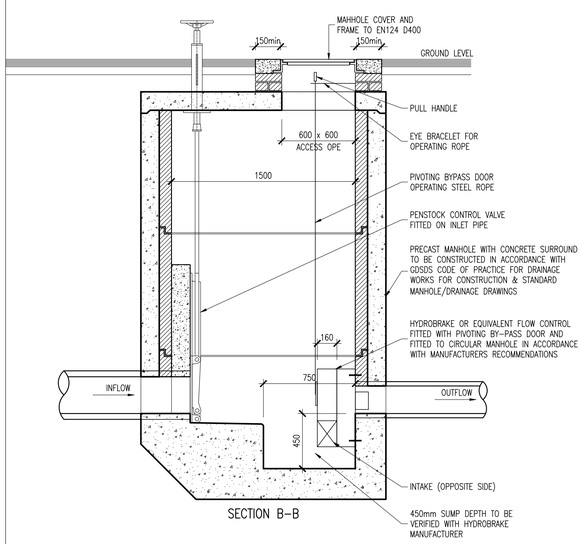

SECTION B–B

FLOW CONTROL MANHOLE DETAIL

SCALE 1:25

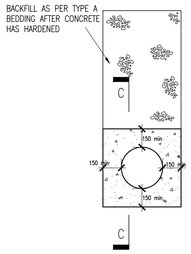

RIGID PIPES : SURROUND

CONCRETE BEDDING
TO BE USED WHERE COVER LESS THAN 1.2m AND / OR AS DIRECTED BY THE ENGINEER (REFER TO LONGITUDINAL SECTIONS)

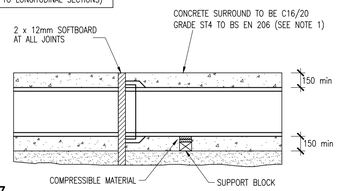

SECTION C – C

TYPE Z
CONCRETE BEDDING/SURROUND
(COVER 750mm – 1200mm)

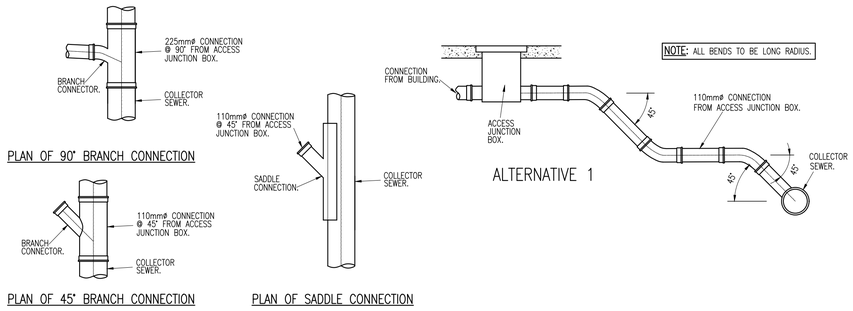

NOTE: ALL BENDS TO BE LONG RADIUS.

PIPE CONNECTION DETAILS

NTS

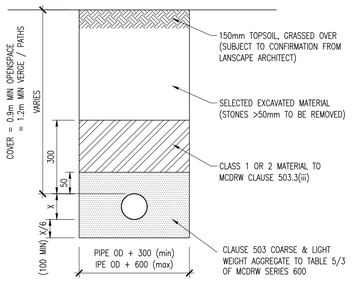

A – BEDDING/BACKFILL DETAIL
ACROSS OPEN SPACE (SIMILAR)

PIPE OD = PIPE OVERALL DIMENSION

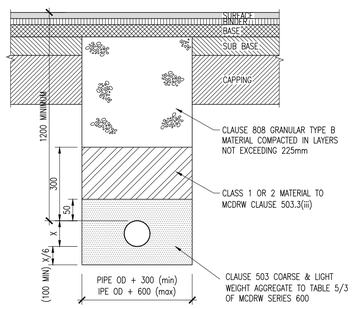

B – BEDDING/BACKFILL DETAIL
IN ROADWAYS/VERGES/PATHS

C – TRENCH BACKFILL/REINSTATEMENT DETAIL
IN EXISTING ROADS

NOTES:

1. ALL DIMENSIONS ARE IN MILLIMETRES.
2. DIMENSION X IS THE EXTERNAL DIAMETER OF THE PIPE (ø225 = 301mm, ø450 = 588mm & WIDER AT SOCKETS).
3. THE MINIMUM AND MAXIMUM WIDTH OF THE TRENCH APPLIES ON AND BELOW A LINE 300mm ABOVE THE OUTSIDE TOP OF THE PIPE. ABOVE THE 300mm LINE THE TRENCH BACKFILL MATERIAL SHALL BE AS PER TYPICAL TRENCH DETAILS.
4. BEDDING TO BE COMPACTED IN ACCORDANCE WITH SPECIFICATION & MANUFACTURERS RECOMMENDATIONS

TYPE S
(COVER> 1.2 METRES TO CROWN)

PIPE BEDDING DETAILS

SCALE 1:25

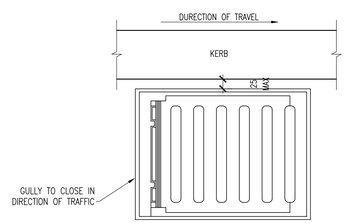

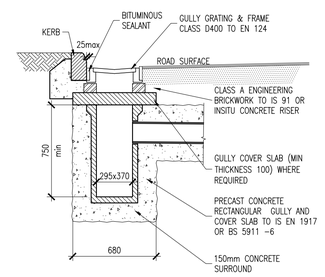

ROAD GULLY DETAILS SECTION

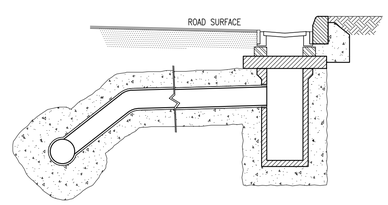

GULLY WITH CONNECTION ON OPPOSITE SIDE OF ROAD

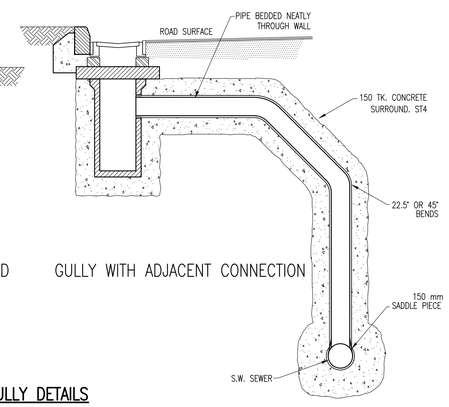

GULLY WITH ADJACENT CONNECTION

ROAD GULLY DETAILS

SCALE 1:25

ON ORIGINAL

0 5 10 15 20 25 30 40 50mm

© COPYRIGHT OF THIS DRAWING IS RESERVED BY DBFL CONSULTING ENGINEERS. NO PART SHALL BE REPRODUCED OR TRANSMITTED WITHOUT THEIR WRITTEN PERMISSION.

NO CHANGES OF WHATSOEVER NATURE ARE TO BE MADE TO ANY DETAILS SET OUT OR CONTAINED IN ANY DBFL SPECIFICATIONS OR DRAWINGS UNLESS THE EXPRESS CONSENT HAS BEEN OBTAINED IN ADVANCE, IN WRITING, FROM DBFL.

NOTES:

1. WHERE ROCKS OR OTHER HARD TRENCH BOTTOM IS ENCOUNTERED, THE FIGURE DENOTED BY * IS TO BE DOUBLED.
2. TYPE 1 GRANULAR MATERIAL : BROKEN STONE OR GRAVEL TO PASS 10mm SIEVE AND BE RETAINED ON 5mm SIEVE.
3. TYPE 2 GRANULAR MATERIAL : BROKEN STONE OR GRAVEL TO PASS 10mm – 25mm SIEVE, ACCORDING TO PIPE SIZE, (SEE TABLE) AND BE RETAINED ON 5mm SIEVE.
4. CLAUSE 601 S.R.W. BACKFILL : UNIFORM READILY COMPACTED MATERIAL FREE FROM TREE ROOTS, VEGETABLE MATTER, BUILDING DEBRIS, AND FROZEN SOIL AND EXCLUDING CLAY LUMPS RETAINED ON A 75mm SIEVE AND STONES RETAINED ON A 37.5mm SIEVE.
5. RIGID PIPES SHALL MEAN CAST OR SPUN IRON, CONCRETE OR CLAY.
6. GULLY GRATINGS AND FRAMES SHALL COMPLY WITH THE REQUIREMENTS OF I.S./E.N./124 1994. GULLIES SHALL BE CLASS D400.
7. GULLY WALLS SHALL BE CONSTRUCTED IN CLASS 30N/mm2 PRECAST OR INSITU CONCRETE OR ALTERNATIVELY IN SOLID CONCRETE BLOCKS DESIGNATED S10, STRENGTH 10N/mm2
8. ALL PIPES TO BE BEDDED IN ACCORDANCE WITH MANUFACTURERS RECOMMENDATIONS
9. SURFACE WATER SEWERS TO BE CLASS H CONCRETE TO IS EN1916 AND IS 6 2004.

rev	date	description	by	chkd.
P01	13/06/22	STAGE 3 SHD	PJC	NCG

client approval
- A - Approved
- B - Approved with comments
- C - Do not use

suitability: S2 - INFORMATION
issue purpose: PLANNING

DBFL Consulting Engineers
Civil, Structural & Transportation Engineering
www.dbfl.ie

DUBLIN OFFICE: Ormond House, Upper Ormond Quay, Dublin 7, D07 W704
PHONE +353 1 400 4000

CORK OFFICE: 14 South Mall, Cork, T12 CT91
PHONE +353 21 2024538

WATERFORD OFFICE: Suite 8b The Atrium, Maritana Gate, Canada Street, Waterford, X91 W028
PHONE +353 51 309 500

project ref.
NEWCASTLE SOUTH

drawing title
TYPICAL DRAINAGE DETAILS SHEET 2

client
CAIRN HOMES PROPERTIES LTD

designed by	author	scale	sheet size
NCG	IC	AS SHOWN	A1

drawing no. 210026-DBFL-CS-SP-DR-C-5302
revision P01